acphotonics

RoHS COMPLIANT

High Power PLC Splitter



FEATURES

Low Insertion Loss
Low PDL
Excellent Environmental & Mechanial Stability
Qualified Under Telcordia GR-1221 and GR-1209

APPLICATION

FTTX (FTTP, FTTH, FTTN, FTTC)
Passive Optical Networks (PON)
Local Area Networks (LAN)
Cable Television
Test Equipments

PERFORMANCE SPECIFICATIONS

Parameter	Specifications											
Operating Wavelength	1310±40 nm or 1550±40 or1260 ~ 1650 nm											
Type	1x2	2x2	1x4	2x4	1x8	2x8	1x16	2x16	1x32	2x32	1x64	2x64
Insertion Loss* (Max)	4.0dB	4.5dB	7.2dB	7.8dB	10.8dB	11.2dB	14.0dB	14.5dB	16.9dB	17.5dB	21.0dB	22.2dB
Uniformity *	0.50dB	1.2dB	0.60dB	1.2dB	0.80dB	1.5dB	1.2dB	2.0dB	1.7dB	2.5dB	2.5dB	2.5dB
Polarization Dependent Loss*	0.20dB	0.30dB	0.20dB	0.30dB	0.30dB	0.40dB	0.30dB	0.40dB	0.30dB	0.40dB	0.30dB	0.40dB
Wavelength Dependent Loss	0.30dB	0.30dB	0.30dB	0.40dB	0.30dB	0.60dB	0.50dB	0.60dB	0.80dB	0.80dB	0.80dB	1.0dB
Temperature Dependent Loss (-40 ~ 85°C)	≤ 0.50dB											
Return Loss*	≥50dB											
Directivity *	≥55dB											
Optical Power	≤ 1.0W (Higher power upon request)											
Operating Temperature	-40 to +85°C											
Storage Temperature	-40 to +85°C											
Package Dimensions(LxWxH)	Type S: 89x51x9.2 Type F: 96x78x8 Type L1: LGX box single wide						Type F: 96x78x8 Type G: 96x78x13 Type H: 96x78x16 Type R1: 19" Rack single wide Type L1: LGX box single wide** Type L2: LGX box double wide		Type G: 96x78x13 Type H: 96x78x16 Type R1: 19" Rack single wide Type L2: LGX box double wide**		Type H: 96x78x16 Type R1: 19" Rack single wide Type L2: LGX box double wide**	
Package Dimensions(LxWxH) [Type A:(Ribbon and bare fiber)]	40x4x4	40x4x4	40x4x4	40x4x4	40x4x4	60x7x4	60x7x4	60x7x4	60x7x4	60x7x4	60x12x4	60x12x4
Package Dimensions(LxWxH) [Type A:(900um loose tube)]	60x7x4	60x7x4	60x7x4	60x7x4	60x7x4	60x7x4	60x12x4	60x12x4	80x20x6	80x20x6	100x40x6	100x40x6

Note: *At room temperature and excludes connector loss.

** For small form factor connectors only.

High Power PLC Splitter

MECHANICAL DIMENSIONS

A Package

WITHOUT FANOUT AND CONNECTORS

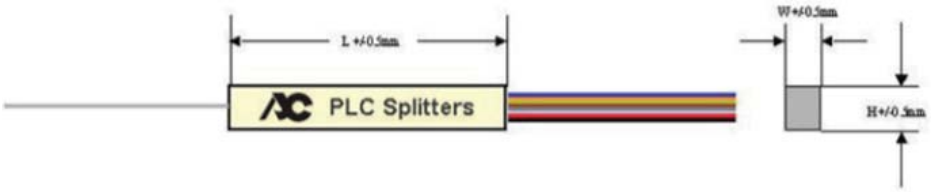

WITH FANOUT AND NO CONNECTORS

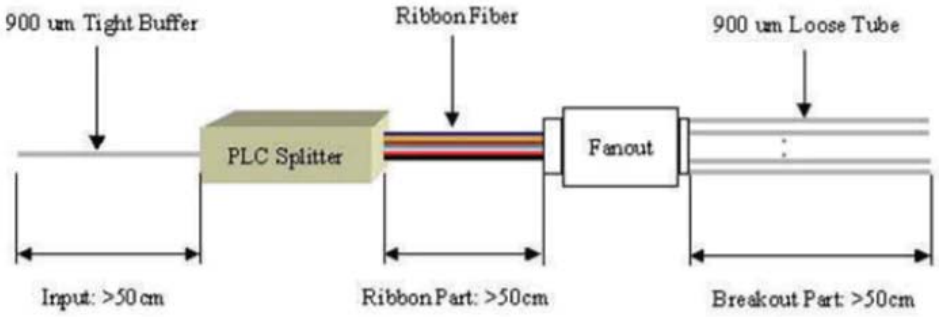

900UM LOOSE TUBE



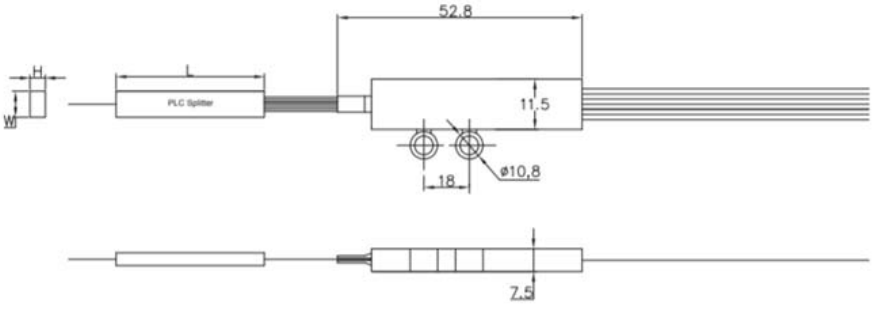

High Power PLC Splitter

MECHANICAL DIMENSIONS

S Package

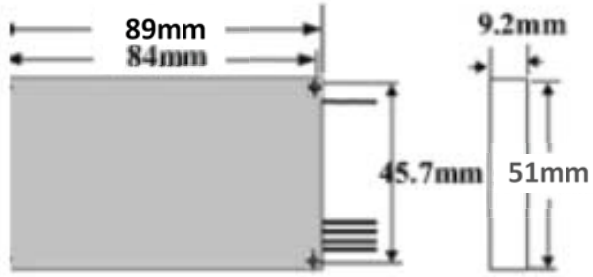

F/G/H Package

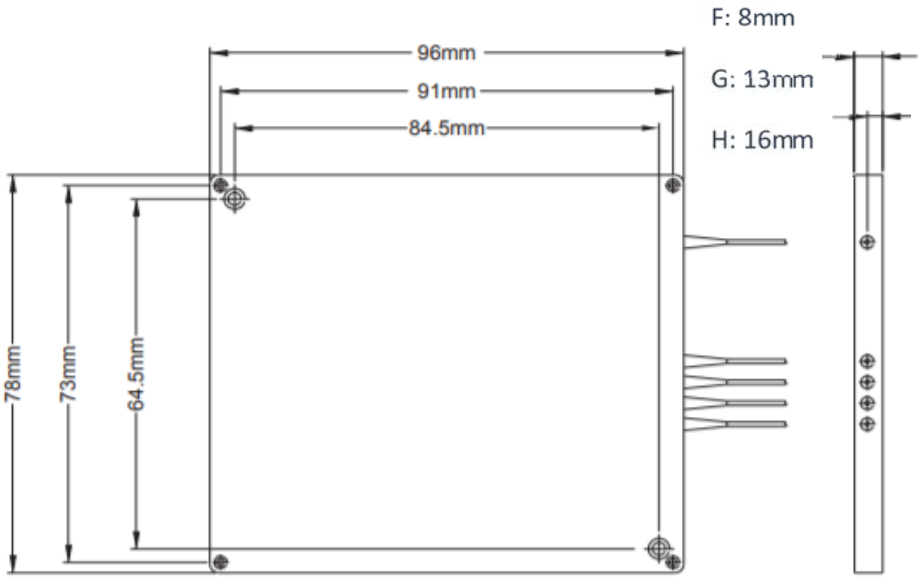

Single LGX Box

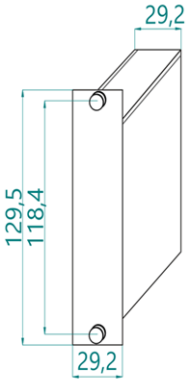

Double LGX Box

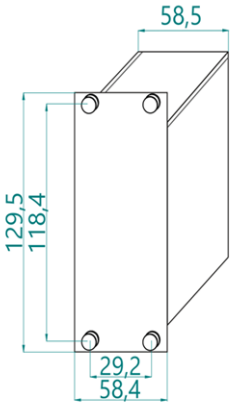

19" Rack

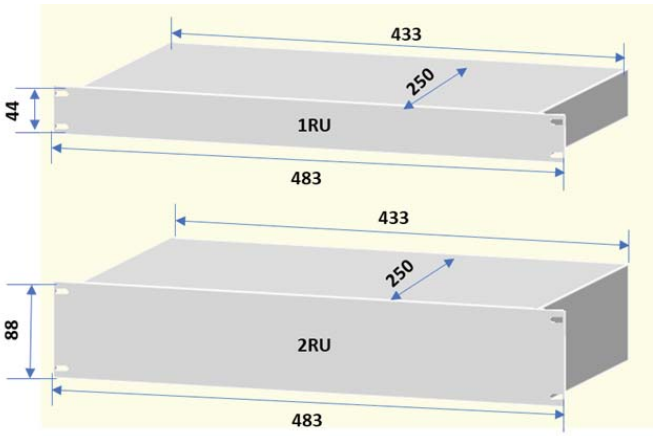

High Power PLC Splitter

CHANNEL CONFIGURATIONS

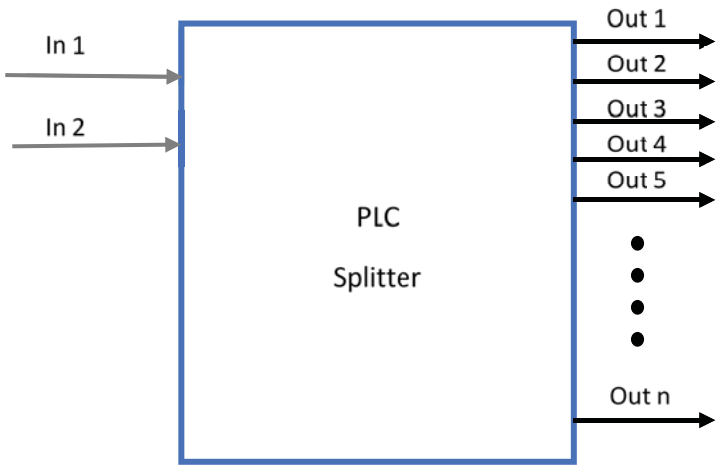

ORDERING INFORMATION

| | | |